ANGLE	± 5°	REV	LOCAS	DESCRIPTION	DESIGN	DATE 卫国峰
X.XXX	± 0.05	01			DRAWN	DATE 尚 伟
X.XX	± 0.15	02			CHECKED	DATE 吴汉学
X.X	± 0.25	03			AUDITED	DATE 龚劲松
X	± 0.50	04			APPROVED	DATE eric

Specifications/备注（Remark)

1-材料（MATERIAL)

胶芯：PA6T+30%G.F UL94V-0，颜色：黑色

Housing:PA6T+30%G.F UL94V-0,Color:Black

四方针：黄铜/镍底30u"MIN/表面镀金0.8u"MIN

Contact：Brass/0.8u"MIN GOLD PLATING OVER ALL 30u"MIN NICKEL UNDERPLATING OVER ALL

2-特性（characteristics):

额定电流：2AMP

Raring Current:2 AMP .

接触阻抗：20MΩ MAX.

Contact Resistance:20MΩ MAX .

绝缘阻抗：1000MΩMIN.

Insulating Resistance:1000MΩMIN.

耐电压：AC 500V.

Withstanding Voltage:AC 500V.

温度范围：-40度至+105度

Temperture Range：-40˚Cto +105˚C

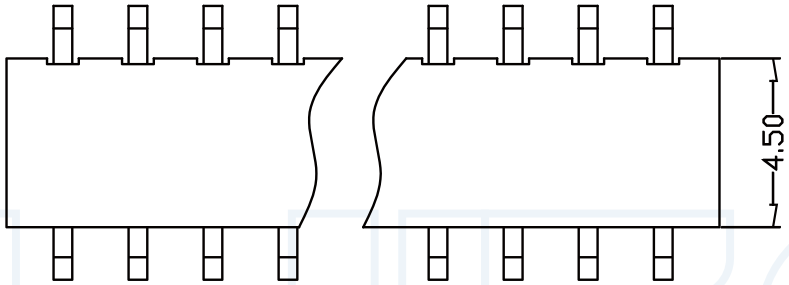

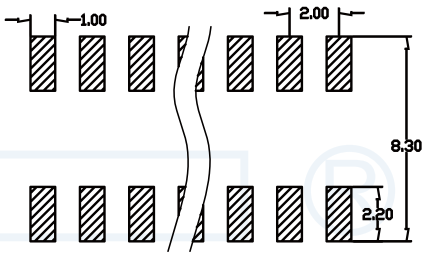

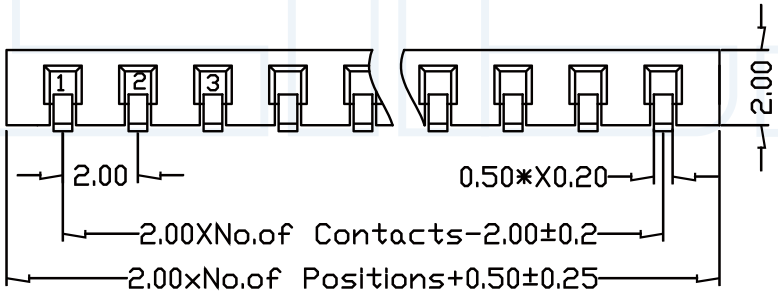

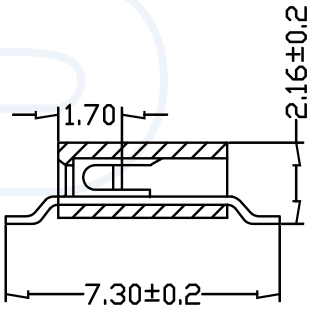

ORDERING INFORMATION

F220-11 XX XX X MU X 1

NO.OF PINS PER ROW
02-40P

CONTACT PLATING
FULL OF GOLD SEMI-GOLD
A0=0.8u" B0=0.8U"
... ...
A9=30u" B9=30U"
S1=ORDINARY TIN PLATED
S2=MATTE TIN PLATED
S3=TIN-PLATED HIGH-TEMPERATURE

INSULATOR MATERIAL
B:PA6T
C:PA9T
D:LCP

PACKING
A:PE Bag
B:TOPE&REED
C:TUBE
D:TUBE+CAP
E:TRAY

YLIES® 东莞市瑞翔精密连接器有限公司
DONG GUAN YLIES PRECISE CONNECTOR CO.,LTD
Tel:0769-85381995 / Fax:0769-85493987 / Email: ylies@ylies-china.com / Web:www.ylies-china.com

PROJECTON	REV	UNIT	SCALE	PAGE
	A	mm	1:1	1/1

TITLE: 2.00mm 单排排母 侧插SMT

DATE: 2017-08-08

PART NO:

DRAWING NO: